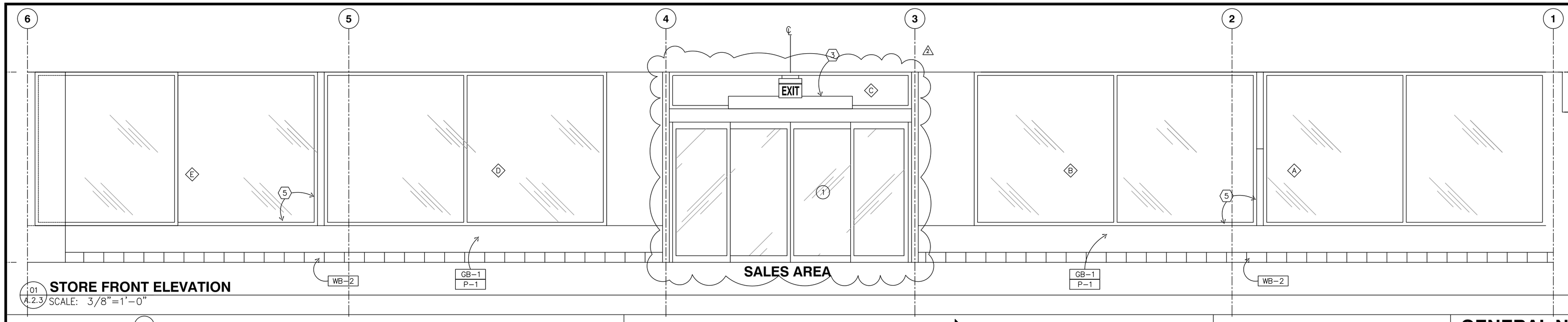

01 A.2.3 **STORE FRONT ELEVATION**
SCALE: 3/8"=1'-0"

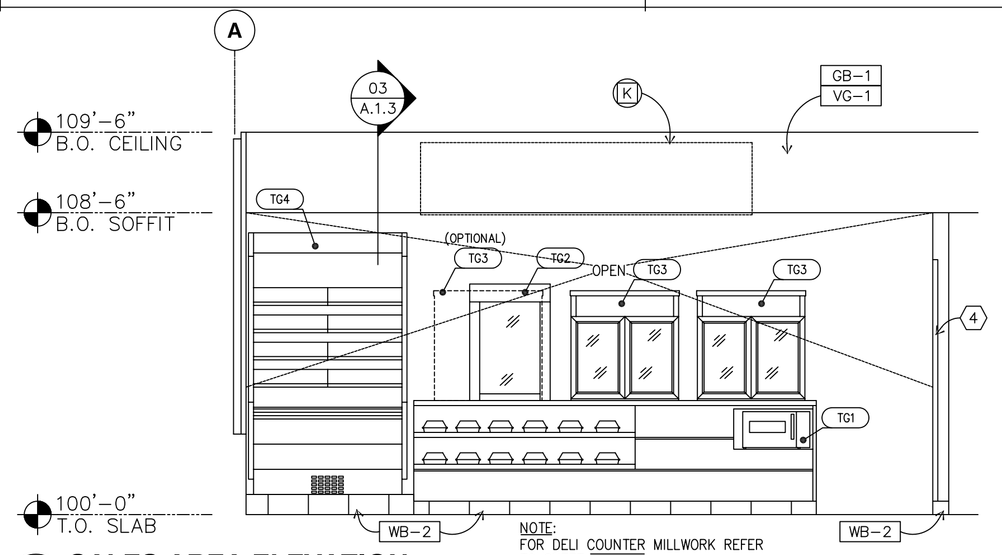

02 A.2.3 **SALES AREA ELEVATION**
SCALE: 3/8"=1'-0"

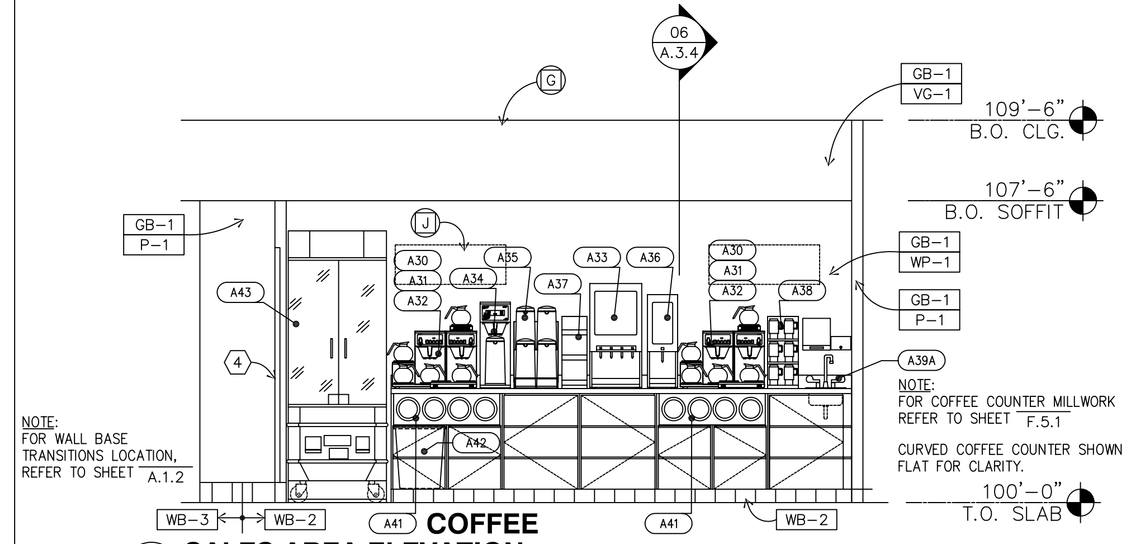

03 A.2.3 **SALES AREA ELEVATION**
SCALE: 3/8"=1'-0"

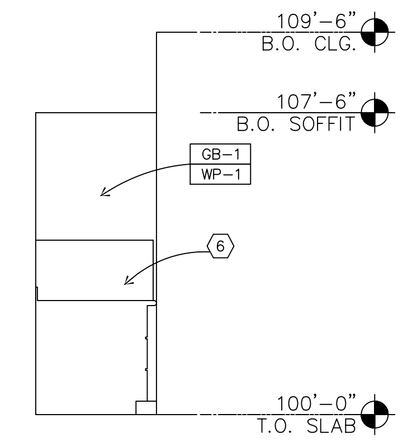

04 A.2.3 **COFFEE AREA ELEVATION**
SCALE: 3/8"=1'-0"

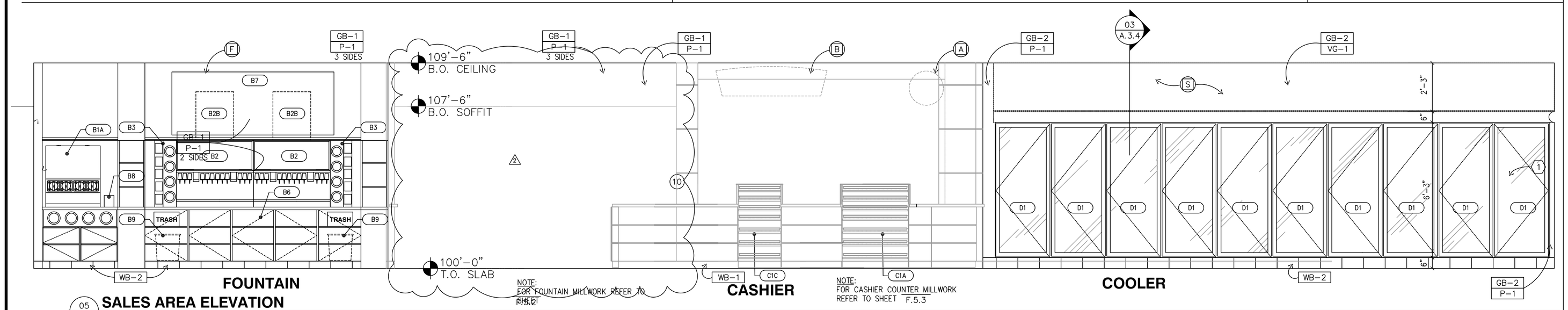

FOUNTAIN
CASHIER
COOLER

05 A.2.3 **SALES AREA ELEVATION**
SCALE: 3/8"=1'-0"

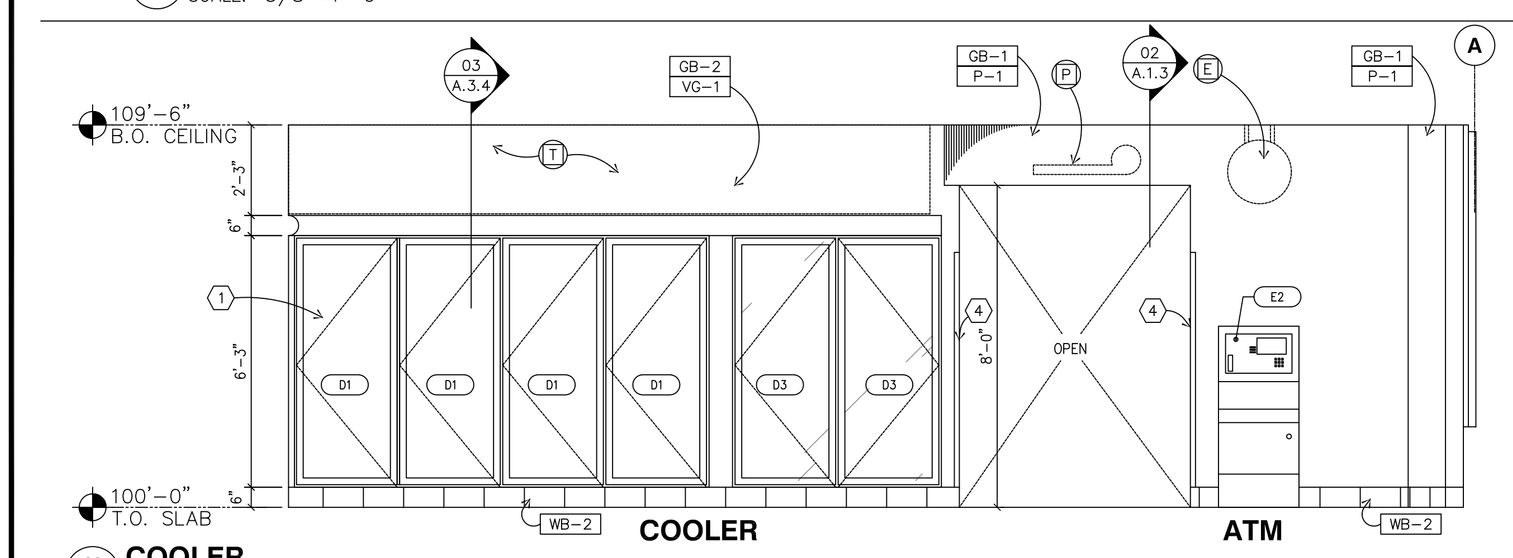

COOLER
ATM

06 A.2.3 **COOLER**
SCALE: 3/8"=1'-0"

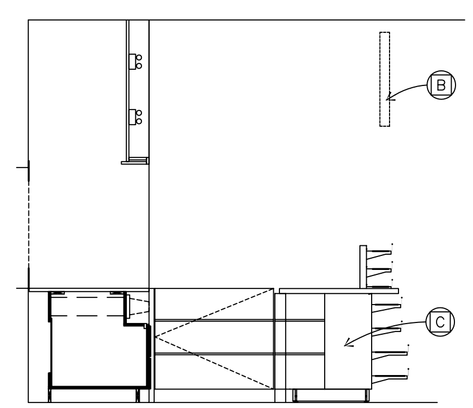

NOTE: FOR CASHIER COUNTER MILLWORK REFER TO SHEET F.5.3

07 A.2.3 **CASHIER**
SCALE: 3/8"=1'-0"

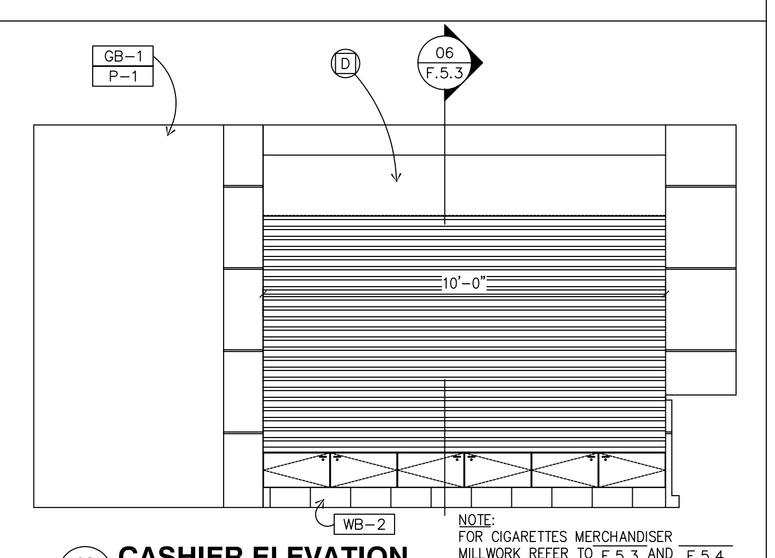

NOTE: FOR CIGARETTES MERCHANDISER MILLWORK REFER TO F.5.3 AND F.5.4

08 A.2.3 **CASHIER ELEVATION**
SCALE: 3/8"=1'-0"

GENERAL NOTES:

A. FOR EQUIPMENT SPECIFICATIONS REFER TO SHEET Q.1.1
B. ALL EQUIPMENT WILL MEET LOCAL HANDICAPPED REQUIREMENTS.
C. IF LISTED FINISH IS UNAVAILABLE, AN ALTERNATE MAY BE SUBSTITUTED UPON APPROVAL AS SPECIFIED ON TITLE SHEET NOTES.

KEYED NOTES:

1. COOLER/FREEZER DOOR BY COOLER BOX MANUFACTURER.
2. BULKHEAD FRAMED WALL
3. FLY FAN
4. CLEAR PLASTIC CORNER GUARDS
5. ALUMINUM STOREFRONT SYSTEM — C-05
6. PLEXIGLAS PROTECTIVE GUARD

INTERIOR PAINTS

P-1 COLOR: ZOLATONE MULTI-COLOR PAINT
43-30864CD (SOLVENT BASE) OR 45-71775C (WATER BASE)
CONTACT: DAVID STRAUSS AND ASSOC. AT (770) 664-7732

P-2 COLOR: SHERWIN WILLIAMS "SAND" (SW2059)
FINISH: SEMI-GLOSS

P-3 NOT USED

P-4 COLOR: SHERWIN WILLIAMS "PURE WHITE" (SW1004)
FINISH: SEMI-GLOSS

SUBSTRATE

GB-1 TYPE: 5/8" GYPSUM BOARD
GB-2 TYPE: 5/8" WATER-RESISTANT GYPSUM BOARD
PLY-1 TYPE: 5/8" PLYWOOD
PLY-2 TYPE: 5/8" MDO PLYWOOD

WALL FINISH

WALL PAPER

WP-1 COLOR: #B679
BY: BORATAPETER
CONTACT: ROOS INTERNATIONAL (800) 888-2776

4-C PRINTED GRAPHIC FILM

VG-1 COLOR: CUSTOM GRAPHIC
BY: GRADY McCAULEY

NOTE: PRIME AND PAINT GYPSUM BOARD ONE COAT SEMI GLOSS PAINT PRIOR TO INSTALLATION OF GRAPHICS. PROVIDE CLEAR PLASTIC CORNER GUARDS AT EDGES BELOW 6'-0"

FIBER REINFORCED PANEL

FRP-1 COLOR: WHITE
BY: KEMLITE (85) OR MARLITE (FRP S100G)
FRP-2 TYPE: DISPLAWALL 6000 (DW6415) FROST WHITE
INSERT: 9101 MILL FINISH
BY: MARLITE

WALL BASE

WB-1 COLOR: 772 "CHAMPAGNE"
BY: ROPPE
SIZE: 1/8"X4" COVE BASE
OTHER LOCATIONS: GONDOLAS AND MILLWORK
WB-2 COLOR: "BIANCO" (DN01)
BY: DALTILE SIZE: 6"X12" COVE BASE
GROUT: 1/4" SAND (96) BY MAPEI
WB-3 COLOR: "RED SUPERTREAD" (0081)
BY: DALTILE SIZE: 6"X6" COVE BASE
GROUT: 1/4" GRAY (09) BY MAPEI

CERAMIC WALL TILE

WT-1 COLOR: SEMI-GLOSS ALMOND (K165)
BY: DALTILE SIZE: 6"x6"
WT-2 COLOR: SEMI-GLOSS NAVY (K89)
BY: DALTILE SIZE: 6"x6"
WT-3 COLOR: SEMI-GLOSS MEXICAN SAND (K-174)
BY: DALTILE SIZE: 6"x6"
WT-4 COLOR: SEMI-GLOSS VERMILLION (DM-1)
BY: DALTILE SIZE: 6"x6"
WT-5 COLOR: SEMI-GLOSS MUSTARD (DM-12)
BY: DALTILE SIZE: 6"x6"
GROUT: 1/4" WHITE (00) BY MAPEI

LAMINATES

SS-1 COUNTER TOP: GILBRALTER "BEIGE TEMPEST" (1530-TM)
BY: WILSONART
USE 0.125" SOLID SURFACE LAMINATE AT PAYPOINTS
SS-2 COUNTER TOP: 18 GAUGE STAINLESS STEEL
L-1 WOOD LAMINATE: "FUSION MAPLE" (7909-60)
BY: WILSONART
L-2 METAL LAMINATE: "GREY" WITH CUSTOM FINISH (D92J60)
BY: WILSONART
L-3 COLOR LAMINATE: "BLUE" (1025)
BY: ABBETT LAMINATI

CLIENT:
PINNACLE REAL ESTATE HOLDINGS, INC.
RIVERSIDE COUNTY TRAVEL ZONE LLC
COO & CO-FOUNDER

BRAND:
ARCO
BP WEST COAST PRODUCTS, LLC

CONSULTANT:
WESTERN STATES
Engineering & Construction, Inc.
733 N. MAIN ST
ORANGE, CA 92867
714/769-2000
714/769-2002 Fax
www.wsecinc.com
A 'Design Build' Co.

NO.	DATE	REVISION DESCRIPTION
1	11-17-03	BUILDING SUBMITTAL
2	4-19-04	REVISED PER PLAN CHECK & IN-HOUSE CORRECTIONS BUILDING SUBMITTAL
3	6-01-04	REVISED PER PLAN CHECK & IN-HOUSE CORRECTIONS BUILDING SUBMITTAL
4	8-10-04	REVISED PER PLAN CHECK & IN-HOUSE CORRECTIONS
5	9-27-04	REVISED PER PLAN CHECK & IN-HOUSE CORRECTIONS

SEAL:
REGISTERED PROFESSIONAL ENGINEER KAMAL B MOUCHAYTAR NO. C051050 Exp. 9/30/05 CIVIL STATE OF CALIFORNIA

CONFIDENTIALITY STATEMENT:
THE RECIPIENT OF THESE MATERIALS UNDERSTANDS THAT THE REPORT OF THE MATERIALS PROVIDED BY BP, AND ALSO, THAT THE MATERIALS CONTAIN PRIVILEGED AND CONFIDENTIAL BUSINESS INFORMATION OF BP. ACCORDINGLY, THE RECIPIENT AGREES TO RETAIN THESE MATERIALS IN STRICT CONFIDENCE AND AGREES NOT TO DISCLOSE THESE MATERIALS TO ANYONE OTHER THAN THE RECIPIENT AND NOT TO MAKE COPIES OF THE MATERIALS. THE RECIPIENT AGREES TO USE THE MATERIALS ONLY FOR THE LIMITED PURPOSE FOR WHICH BP HAS MADE THE MATERIALS AVAILABLE, AND RECIPIENT AGREES TO RETURN ALL MATERIALS TO BP UPON COMPLETION OF THE LIMITED INTENDED PURPOSE OR UPON THE REQUEST OF BP, WHICHEVER COMES FIRST.

DEVELOPMENT INFORMATION:
NEW BUILD (STICK)
3600 SERIES AM/PM CENTER CASHIER TO GO DELI

SITE ADDRESS:
23261 CAJALCO EXWY.
@ HARVILL AVENUE
PERRIS, California 92571

DESIGNED BY: -	ALLIANCE Z&DM: -
CHECKED BY: -	BP REPM: -
DRAWN BY: -	ALLIANCE PM: -
VERSION: V01 11.17.03	PROJECT NO: E75403

DRAWING TITLE:
BUILDING # 1 INTERIOR ELEVATIONS

SHEET NO:
DOFO A.2.3