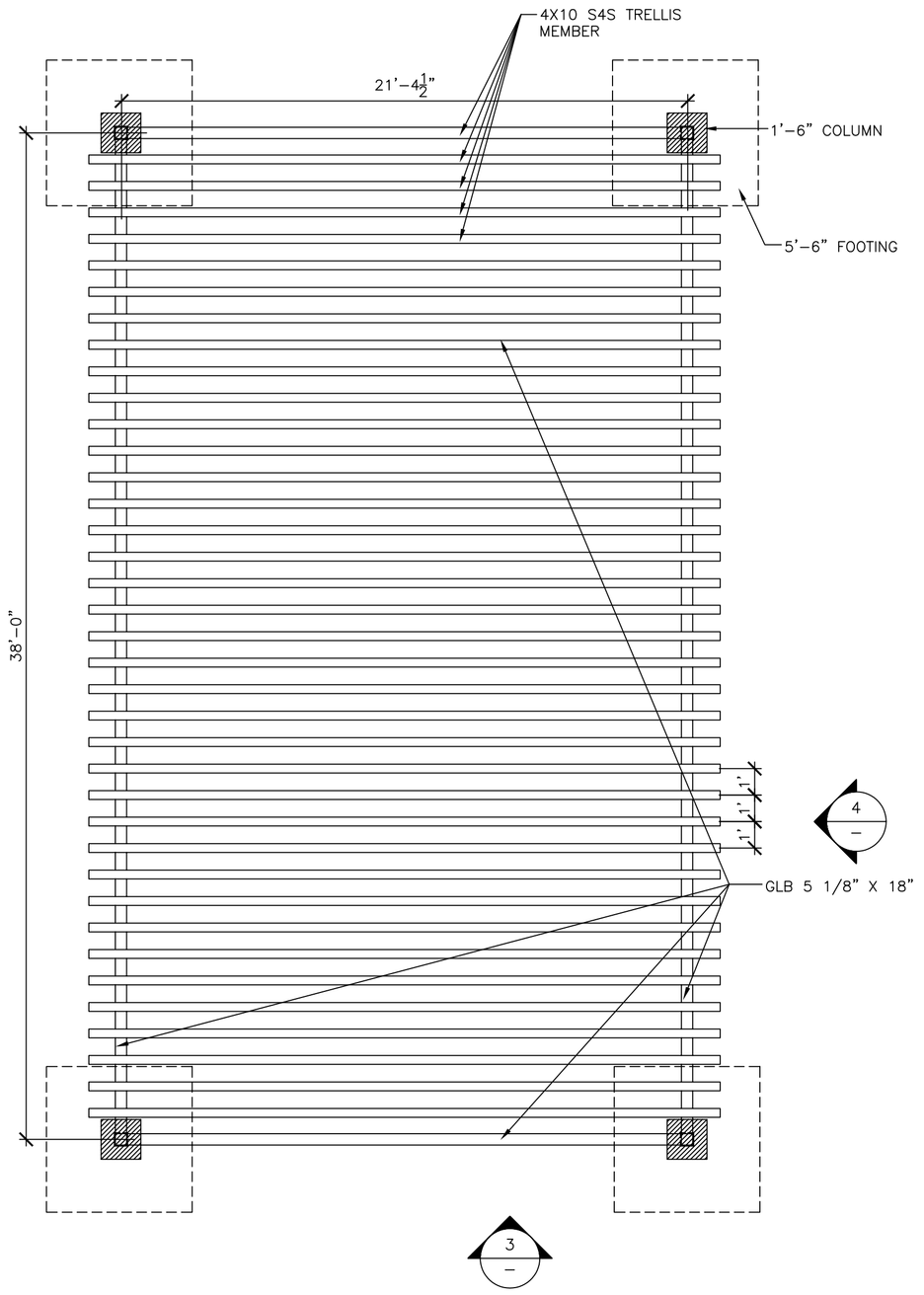

1 TRELLIS PLAN

SCALE: 1/4"=1'-0"

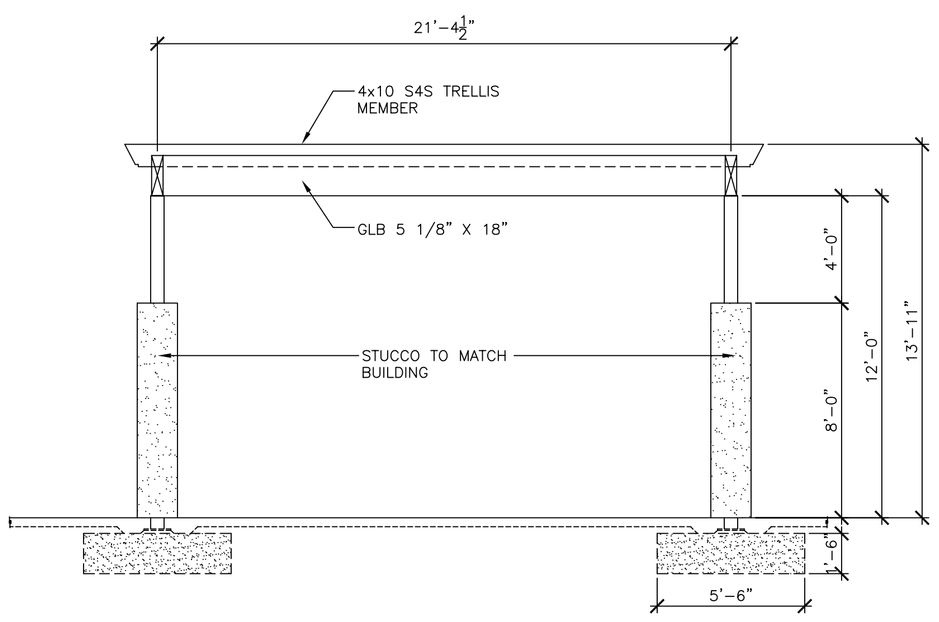

3 ELEVATION 1

SCALE: 1/4"=1'-0"

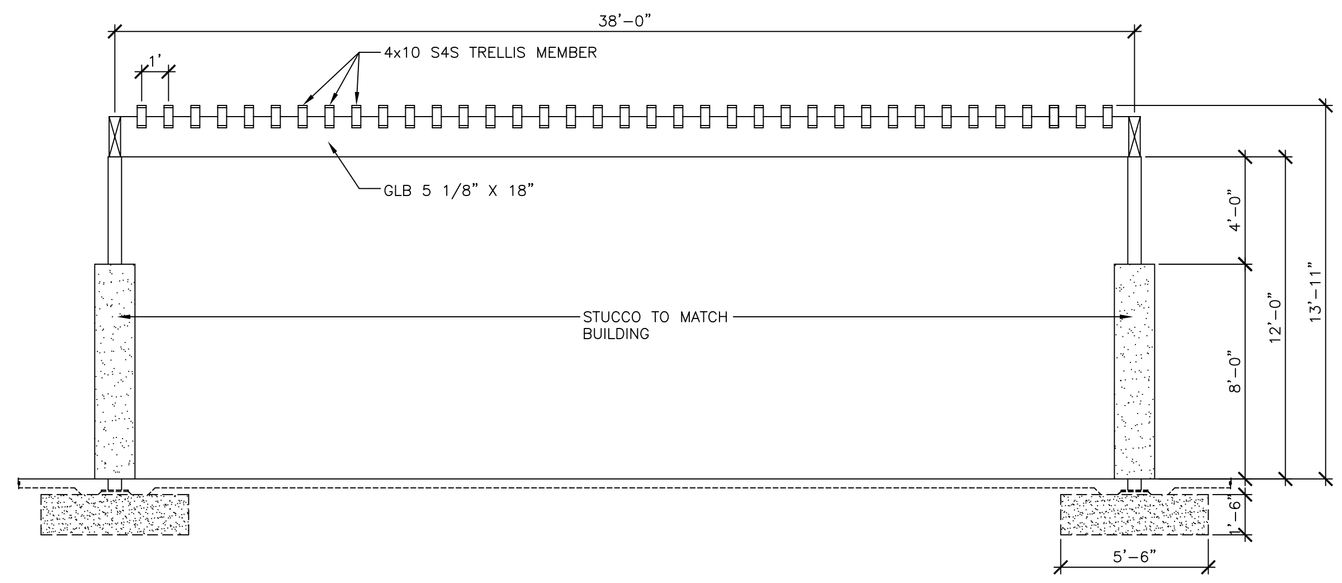

4 ELEVATION 2

SCALE: 1/4"=1'-0"

CLIENT:

PINNACLE REAL ESTATE HOLDINGS, INC.
RIVERSIDE COUNTY TRAVEL ZONE LLC
COO & CO-FOUNDER

BRAND:

ARCO

BP WEST COAST PRODUCTS, LLC

CONSULTANT:

WESTERN STATES
Engineering & Construction, Inc.
733 N. MAIN ST
ORANGE, CA 92867
714/769-2000
714/769-2002 Fax
www.wsecinc.com
A "Design Build" Co.

NO.	DATE	REVISION DESCRIPTION
1	11-17-03	BUILDING SUBMITTAL
2	4-19-04	REVISED PER PLAN CHECK & IN-HOUSE CORRECTIONS BUILDING SUBMITTAL
3	6-01-04	REVISED PER PLAN CHECK & IN-HOUSE CORRECTIONS BUILDING SUBMITTAL
4	8-10-04	REVISED PER PLAN CHECK & IN-HOUSE CORRECTIONS
5	9-27-04	REVISED PER PLAN CHECK & IN-HOUSE CORRECTIONS

SEAL:

REGISTERED PROFESSIONAL ENGINEER
KAMYL S. MOUCHAWAR
NO. C051050
Exp. 9/30/05
CIVIL
STATE OF CALIFORNIA

CONFIDENTIALITY STATEMENT:
THE RECIPIENT OF THESE MATERIALS UNDERSTANDS THAT COPYRIGHT IN THE MATERIALS IS OWNED BY BP, AND ALSO, THAT THE MATERIALS CONTAIN PRIVILEGED AND CONFIDENTIAL INFORMATION OF BP. ACCORDINGLY, THE RECIPIENT AGREES TO RETAIN THESE MATERIALS IN STRICT CONFIDENCE AND AGREES NOT TO DISCLOSE THESE MATERIALS TO ANY OTHER PARTY AND FURTHER AGREES NOT TO MAKE COPIES OF THE MATERIALS. THE RECIPIENT AGREES TO USE THE MATERIALS ONLY FOR THE LIMITED PURPOSE FOR WHICH BP HAS MADE THE MATERIALS AVAILABLE, AND RECIPIENT AGREES TO RETURN ALL MATERIALS TO BP EITHER UPON COMPLETION OF THE INTENDED PURPOSE OR UPON THE REQUEST OF BP, WHICHEVER COMES FIRST.

DEVELOPMENT INFORMATION:

NEW BUILD (STICK)

3600 SERIES AM/PM CENTER CASHIER TO GO DELI

SITE ADDRESS:

23261 CAJALCO EXWY.

@ HARVILL AVENUE
PERRIS, California 92571

-

DESIGNED BY:	-	ALLIANCE ZAOM:	-
CHECKED BY:	-	BP REPM:	-
DRAWN BY:	-	ALLIANCE PM:	-
VERSION: V01 11.17.03		PROJECT NO: E75403	

DRAWING TITLE:

TRELLIS DETAILS

2

SHEET NO:

DOFO A.6.1